Intech Instruments

# Intech Micro
# 2100-IS-USB




# Installation Guide

## 2100-IS-USB Installation Guide Index.


| | |
|---|---|
| Features. | Page 3 |
| Ordering Information. | Page 3 |
| Description. | Page 3 |
| 2100-IS-USB Front View. | Page 3 |
| Specifications. | Page 4 |
| 2100-IS-USB Layout & Dimensions. | Page 4 |
| Switch and LED Functions. | Page 5 |
| Alarm Settings. | Page 5 |
| RS422/485 Jumper Settings. | Page 5 |
| Outstation Layout - RS485. | Page 6 |
| Outstation Layout - RS422. | Page 7 |
| 2300 Series Connections - RS485 Only. | Page 8 |
| Connection to a MicroScan SCADA System. | Page 9 |
| Replacing an Existing 2100-IS with the 2100-IS-USB (MicroScan): | Page 10 |
| Wiring and Installation. | Page 11 |

# 2100-IS-USB
# USB to RS422/485 Converter.

Converts and Isolates USB from a PC to RS422 or RS485 for communication to a field Data Logging system.

## *Features.*

- Audible & Relay Alarms for Communication Failure.
- Isolation Between Field Units & Computer.
- Easy to Install.
- LED Status Indications.
- Selectable Alarm Time Delays.
- Various Alarm Configurations Including Retrigger and Timeout.
- Powered from USB Connection to the Computer.
- Compact Desk Top Box.
- Low Cost.




Intech 2100 Models Include:

| | |
|---|---|
| 2100-A16 Rev1.3 | 16 Universal Input Station, with 4DI, 2RO & 2AO. |
| 2100-M Rev1.1 | 16 Input Programmable Multiplexer. |
| 2100-R2 Rev1.0 | 16 Relay Output Expander for 2100-A16. |

## *Ordering Information.*

**Standard Unit:**

| | |
|---|---|
| **2100-IS-USB** | Isolated USB to RS422/485 Convertor<br>Comes with USB Cable. |

## *Description.*

The 2100-IS-USB is a compact, desktop module that isolates and converts USB from a Windows PC to RS422 or RS485 for communication to an industrial data highway system. Its driver and receiver meet EIA standards RS-422-A and CCITT recommendations V.11 and X.27, and are designed for multipoint transmission on long bus lines in noisy environments. It includes thermal shutdown and over current limiting. The 2100-IS-USB includes audible and fail safe alarms of communications failure, with selectable time delays. It has independent power on both sides of the isolation barrier, making it suitable for working with many types of PCs and PLCs.

## *2100-IS-USB Front View.*




Quality Assurance Programme.
The modern technology and strict procedures of the ISO9001 Quality Assurance Programme applied during design, development, production and final inspection grant long term reliability of the instrument. This instrument has been designed and built to comply with EMC and Safety Standards requirements.



Intech Instruments

## Specifications.

| | | |
|---|---|---|
| Comms Baud Rate | -Standard | 9600 Baud. |
| | -RS422/485 | 300~128,000 Baud. |
| | -USB | 300~300,000 Baud. |
| Power Supply | | 5Vdc @200mA Max, 60mA Typical supplied by USB. |
| EMC Emissions Compliance | | EN 55022-A. |
| EMC Immunity Compliance | | EN 50082-1. |
| Electrical Compliance | | AS/NZS 60950. |
| Comms Isolation Voltage | | 1000Vdc for 1min. |
| Operating Temperature | | 0~60°C. |
| Storage Temperature | | -20~80°C. |
| Operating Humidity | | 5~85%RH Max. Non-Condensing. |
| Housing Dimensions | | L=100mm, W=95mm, H=27mm. |
| Weight | | 150g including cable and packaging. |
| Relay Contact Rating | | 1A @ 24Vdc Max Resistive Load. |
| Relay Isolation Voltage | | 1000Vdc for 1min. |

**Product Liability.** This information describes our products. It does not constitute guaranteed properties and is not intended to affirm the suitability of a product for a particular application. Due to ongoing research and development, designs, specifications, and documentation are subject to change without notification. Regrettably, omissions and exceptions cannot be completely ruled out. No liability will be accepted for errors, omissions or amendments to this specification. Technical data are always specified by their average values and are based on Standard Calibration Units at 25C, unless otherwise specified. Each product is subject to the 'Conditions of Sale'.
**Warning: These products are not designed for use in, and should not be used for patient connected applications.**
**In any critical installation an independent fail-safe back-up system must always be implemented.**

## 2100-IS-USB Layout & Dimensions.

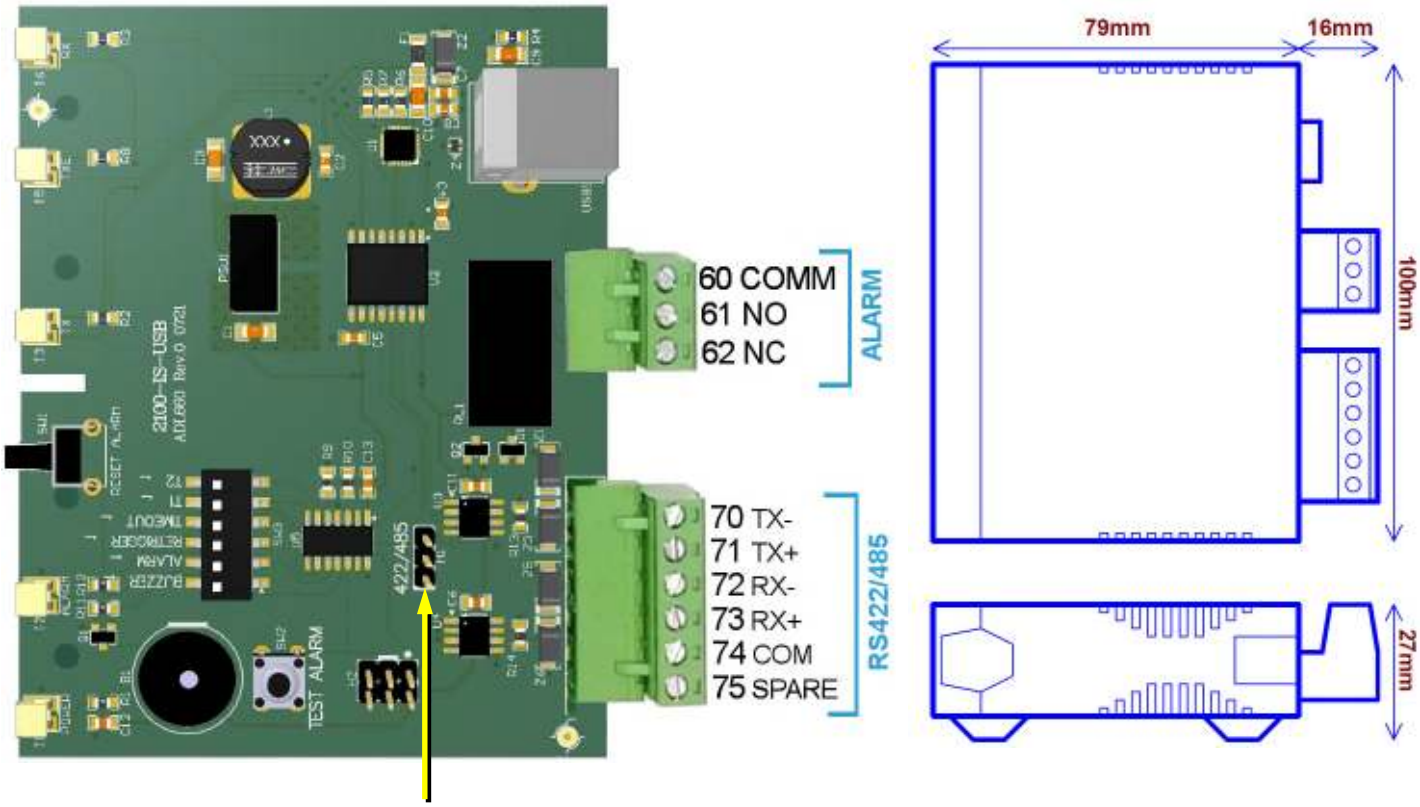


Use Jumper to select RS485 or RS422.

## *Switch and LED Functions.*

**Description of LED Functions.**

| | | |
|---|---|---|
| R.X. | LED ON | Unit Receiving Data From the Field. |
| T.X. | LED ON | Unit Transmitting Data to the Field. |
| T.X.E. | LED ON | Transmit Enable Line Active. |
| ALARM | LED ON | Unit in Alarm. |
| PWR | LED ON | Unit has Power Connected. |
| RESET | Switch | Push this Switch to Reset the Alarm. This does not reset the computer. (See Description of Alarm Function). |

## *Alarm Settings.*

**Description of Alarm Functions.**

After the 'trigger time' has elapsed following no RX data activity, the audible, relay and LED alarms activate. If more RX data is received after unit has gone into alarm, the alarms remain active until the RESET button is pushed - if the S3 is in the OFF position. If S3 is in the ON position the alarm well reset upon the RX activity restarting.
Alarm LED remains on Until the RESET Button is pressed. If S4 is in the OFF position, the alarm buzzer and relay will be continuous until the reset button is pressed.
Pressing the front panel RESET button will cease alarms and restart the 'trigger time'.

**Alarm Configuration.**

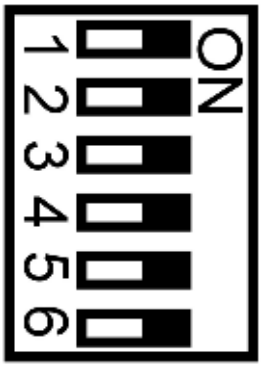


1. BUZZER — Disables the Audible Indicator if set to OFF position.
2. ALARM — Disables the entire alarm function if set to OFF position.
3. RETRIGGER — Alarm will reset after comms RX restarts.
4. TIMEOUT — Alarm sounder and relay will reset after 1 hour, LED stays on.
5. T1
6. T2

| T1 | T2 | Trigger Time |
|---|---|---|
| OFF | OFF | 5 seconds |
| ON | OFF | 4 minutes |
| OFF | ON | 30 minutes |
| ON | ON | 60 minutes |

**Alarm Test.**

You can test the alarm by pressing he TEST ALARM button. This is accessible only with cover removed.

## *RS422/485 Jumper Settings.*

**422 / 485**



This Jumper must be set for correct operation, default setting is for RS485.
It is accessible only by removing the cover.

**RS485 Jumper Setting:**



**RS422 Jumper Setting:**



**Termination Resistors**

The 2100-IS-USB has inbuilt 1K loading resistors across the TX and RX terminals (or A and B in RS485 Mode). This is for reflected signal mitigation. This facilitates straight forward connection of typical network devices like the 2100-A16, so that no loading resistors need to be added externally on shorter and simple networks.
If need be, it is possible to disable these resistors by cutting J1 and J2 on the underside of the PCB, however it is recommended to leave them in place.



Intech Instruments

## *Outstation Layout - RS485:*

**2 Wire RS485 Connections:**



MicroScan Computer.

USB

2100-IS-USB Converter.



| | 74 com | | | 71 Tx+ | 70 Tx- |
|---|---|---|---|---|---|

**Never guess Tx or Rx connections.**
Follow the terminal numbers in the serial connections diagrams exactly.

**Important:**
1. All cables must be screened.
2. All screens must be connected together.
3. The screen must not be earthed at any point.

**RS485 DATA HI-WAY. CABLE POLARITY MUST BE OBSERVED.**

TWISTED PAIR




2400-A16 / 2400-M-R Remote Station.

| SD | 17/16A | 24 | 20 |
|---|---|---|---|
| - | 17 | 3 | 21 |
| + | 16 | 2 | 22 |
| SG | 15 | 1 | 1 |



Shimaden SD17/16A/24/20 with RS485 option.




2100-A16 / 2100-A4 Remote Station.

| | SR23 |
|---|---|
| - | 14 |
| + | 13 |
| SG | 12 |



Shimaden SR23 with RS485 option.




2100-D Remote Station.

| | FP23 |
|---|---|
| - | 14 |
| + | 13 |
| SG | 12 |



Shimaden FP23 with RS485 option.




2100-AO Remote Station.

| | FP93 |
|---|---|
| - | 25 |
| + | 24 |
| SG | 23 |



Shimaden FP93 with RS485 option.

| SR | 91 | 92/93/94 | |
|---|---|---|---|
| | 12 | 3 | - |
| | 11 | 2 | + |
| | 1 | 1 | SG |



Shimaden SR90 Series with RS485 option.

| SR | 82 | 83 | 84 |
|---|---|---|---|
| - | 18 | 25 | 22 |
| + | 17 | 24 | 21 |
| SG | 16 | 23 | 1 |



Shimaden SR80 Series with RS485 option.

| SRS | 11A | 12A | 13A/14A | |
|---|---|---|---|---|
| | 18 | 2 | 12 | - |
| | 17 | 1 | 11 | + |



Shimaden SRS10A Series with RS485 option.

| | SR253 |
|---|---|
| - | 3 |
| + | 9 |
| SG | 5 |



Shimaden SR253 with RS485 option.

| | MR13 | |
|---|---|---|
| | 25 | - |
| | 24 | + |
| | 23 | SG |



Shimaden MR13 with RS485 option.



End of Data Hi-way Junction Box; Resistor = 1KΩ.

1KΩ End of Line resistors might be needed for longer cable runs and multiple instruments. On short runs to a few instruments the inbuilt resistors in the 2100-IS-USB should be sufficient and no 'EoL' resistors needed.

## *Outstation Layout - RS422:*

**4 Wire RS422 Connections:**



MicroScan Computer.

USB

2100-IS-USB Converter.



| 74 | 73 | 72 | 71 | 70 |
|---|---|---|---|---|
| com | Rx+ | Rx- | Tx+ | Tx- |

**Never guess Tx or Rx connections.**
Follow the terminal numbers in the serial connections diagrams exactly.

**Important:**
1. All cables must be screened.
2. All screens must be connected together.
3. The screen must not be earthed at any point.

**RS422 DATA HI-WAY. CABLE POLARITY MUST BE OBSERVED.**

Port 1 Only.



70 71 72 73 74

2400-A16 / 2400-M-R Remote Station.



70 71 72 73 74

2100-A16 / 2100-A4 Remote Station.



70 71 72 73 74

2100-D Remote Station.



70 71 72 73 74

2100-AO Remote Station.



21 20 23 22

IN-2000-AI Remote Station.



36 35 38 37

IN-2000-DI Remote Station.



26 25 28 27

IN-2000-DO Remote Station.



4 6 3 9 5

Shimaden SR25/253 with RS422 option.



25 24 23 22 21

Shimaden SR53/54 with RS422 option.



5 4 3 2 1

Shimaden SR73A/74A with RS422 option.



24 23 21 22 1

Shimaden SD20 with RS422 option.



4 6 3 9 5

Shimaden FP21 with RS422 option.

**Important:** When an **FP21** is present all devices in the Data Hi-way must use **4800 baud rate**.

TWISTED PAIR

TWISTED PAIR

**End of Data Hi-way Junction Boxes; Resistors = 1KΩ.**

**Important: change resistors to 120Ω when using IN-2000-XX Remote Stations in data hi-way.**

## *2300 Series Connections - RS485 Only:*

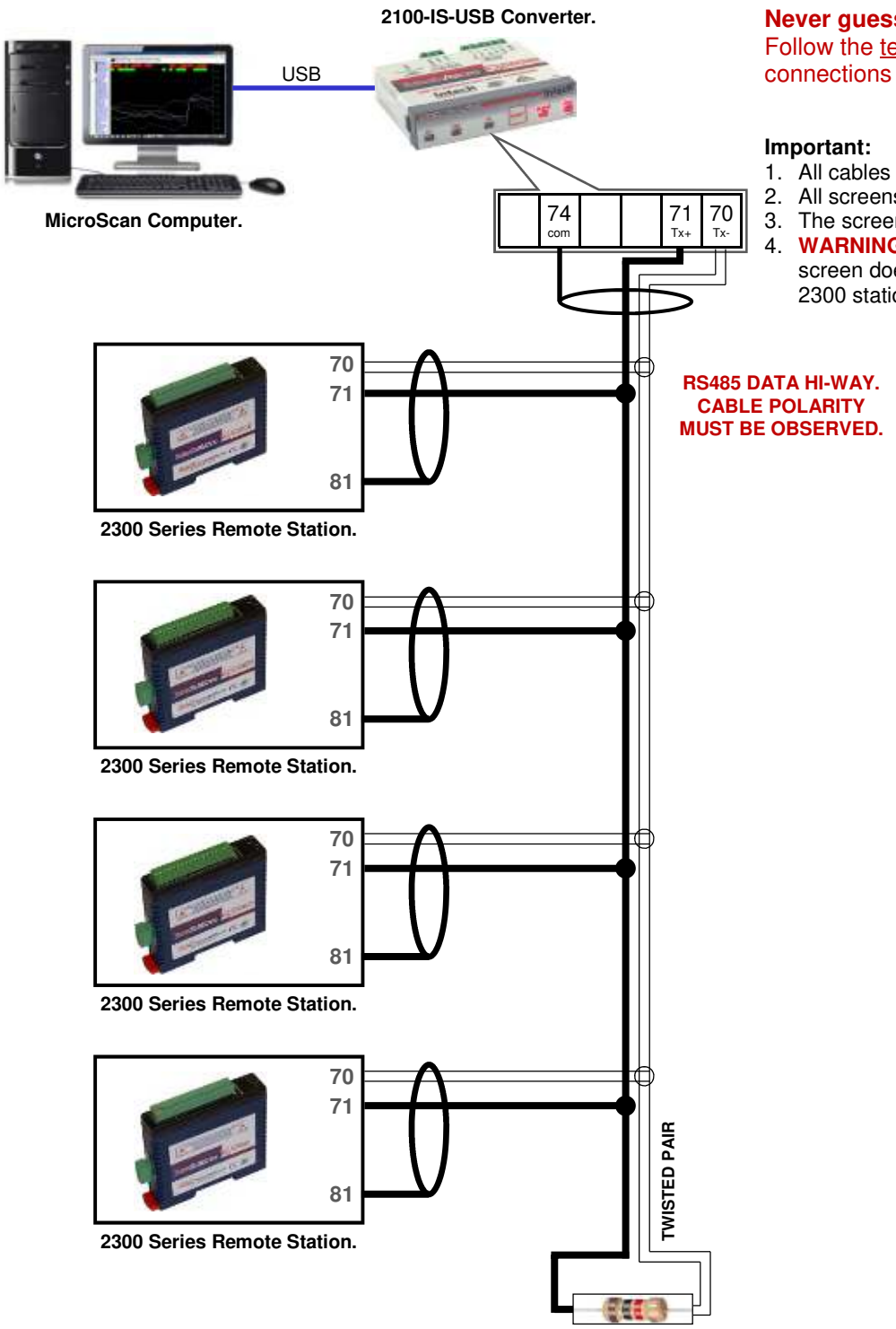


End of Data Hi-way Junction Box;
Resistor = 1KΩ.

1KΩ End of Line resistors might be needed for longer cable runs and multiple instruments. On short runs to a few instruments the inbuilt resistors in the 2100-IS-USB should be sufficient and no 'EoL' resistors needed.

**Never guess Tx or Rx connections.**
Follow the terminal numbers in the serial connections diagrams exactly.

**Important:**

1. All cables must be screened.
2. All screens must be connected together.
3. The screen must not be earthed at any point.
4. **WARNING!** Take care to ensure that the screen does NOT contact terminal 82 on the 2300 station - damage will result.

**Important:** The 2300-XX stations **cannot** share a data hi-way with the 2400-XX / 2100-XX stations and/or Shimaden Controllers.

## *Connection to a MicroScan SCADA System:*

**RS485/422 Data Cabling Installation example 1:**

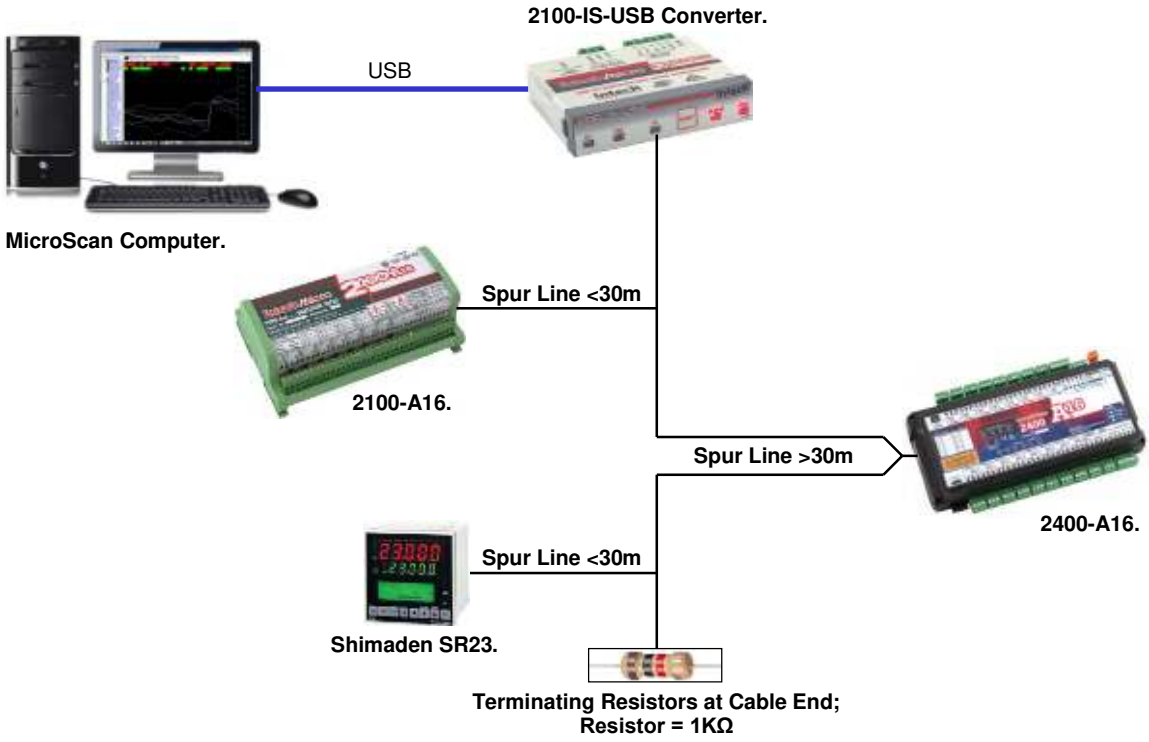


**RS485/422 Data Cabling Installation example 2:**

**2100-IS-USB** converter may be placed anywhere along the data hi-way.

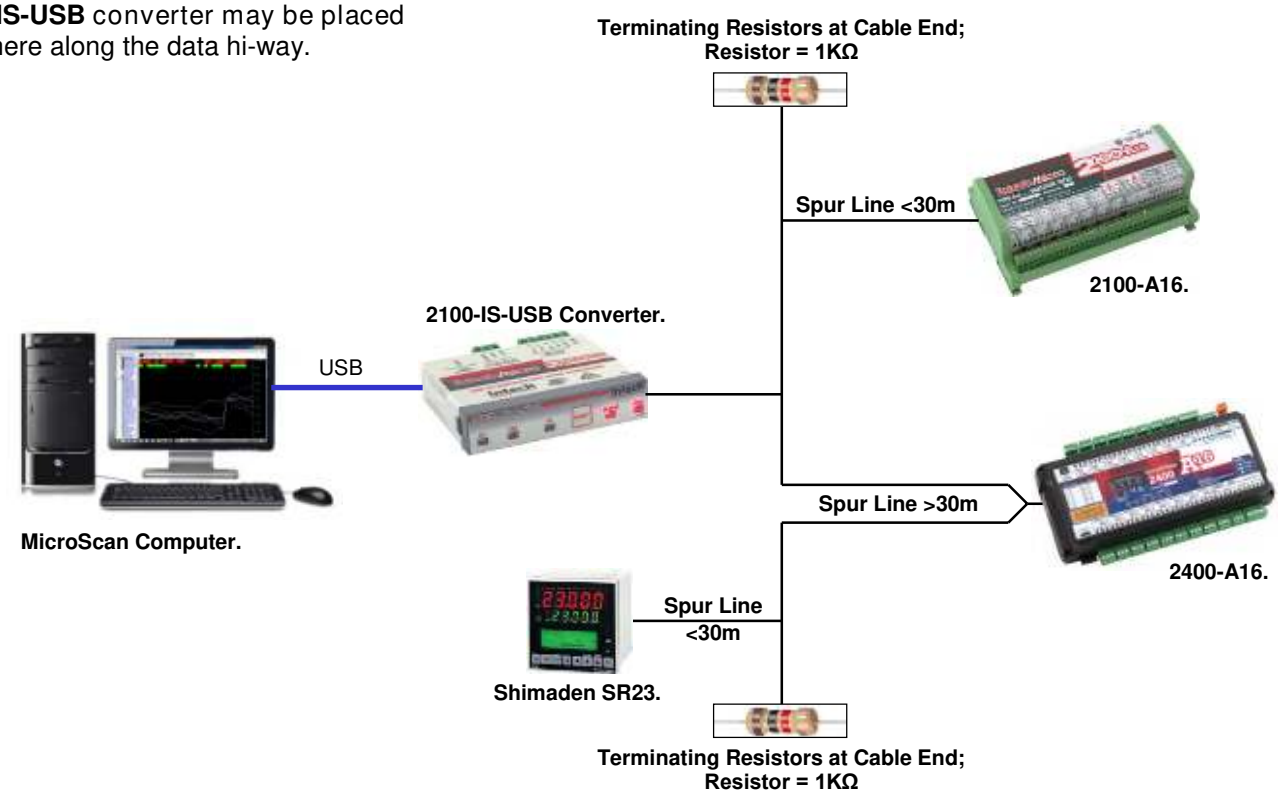


**Note:** Shimaden Controllers must have a unique serial number preprogramed before connecting to the any data hi-way. All signals and power must be de-energised before connecting to any wiring.

**Note:** Total length of trunk line, including spurs, is not to exceed 500m typically when using RS485 or 1200m typically when using RS422.

**IMPORTANT:** The accompanying Installation Instructions must be strictly adhered to.



Intech Instruments

## Replacing an Existing 2100-IS with the 2100-IS-USB (MicroScan):

The 2100-IS-USB is designed for easy, drop-in, replacement of an existing 2100-IS on the data hi-way.
Follow these steps:

1) Install the USB driver from: **https://www.intech.co.nz/software-installation/usb-driver-downloads**
   Down the page under “Current Products that require a driver”, select the Silabs driver version required for your PC.
2) Connect USB cable from the computer to the USB input of the 2100-IS-USB.
3) On the old 2100-IS, unplug the power adapter and remove the power supply wiring from terminals 74/75.
4) Take the 6-pin screw terminal plug from the old 2100-IS and then connect it to the new 2100-IS-USB converter.
5) Change the comm port in MicroScan to suit the new converter (Setup Tools > MicroScan Interface).
6) Check comms with Find Stations, Station status shows “Station XX Good” (bottom left of MicroScan window).

**Note:**
The 2100-IS is discarded. Do not connect the existing gray moulded plugs from the 2100-IS to the 2100-IS-USB.

## *Wiring and Installation.*

**The Proper Installation & Wiring of the 2100-IS-USB.**

All power and signals must be de-energised before connecting any wiring, or altering any Jumpers or Dip Switches.

**Mounting.**

1) Mount in a clean environment.
2) Draft holes must have minimum free air space of 20mm. Foreign matter must not enter or block draft holes.
3) Do not subject to vibration, excess temperature or humidity variations.
4) Avoid mounting near power control equipment.
5) Allow 10mm minimum clearance between the 2100-IS terminals and ANY conductive material.

**Cover Removal and Fitting.**

To remove the PCB to access jumpers and dip switches, push in the GREY BUTTONS at both ends of the enclosure TOP, and slide the PCB from the BASE of the enclosure. To reassemble slide the PCB back into the BASE until both GREY BUTTONS 'snap' into place. Ensure the TOP of the enclosure is flush with the BASE on all sides.

**RS422/485 Comms Signal Cabling.**

1) Use only low capacitance, twisted pair, overall screened data cable. The cable must equal or better the following specifications.

| Cable Specifications. | | |
|---|---|---|
| Conductor Size | | 7/0.20mm, 24AWG |
| Conductor Resistance @ 20C | | 8.9Ω/100m |
| Maximum Working Voltage | | 300Vrms |
| Capacitance between wires of a pair | | 50pF/m |
| Capacitance between each wire to all others bunched together | | 95pF/m |
| Cross-talk between pairs | @ 1kHz<br>@ 100kHz | >-90dB/100m<br>>-50dB/100m |
| Characteristic Impedance | @ 100kHz | 135Ω |
| Attenuation of a pair | @ 1kHz<br>@ 10kHz<br>@ 100kHz<br>@ 50kHz<br>@ 1MHz<br>@ 1.5MHz | 0.15dB/100m<br>0.42dB/100m<br>0.8dB/100m<br>0.9dB/100m<br>1.9dB/100m<br>2.4dB/100m |

**NOTE:** All cables are to be subject during manufacture to in-process spark testing @ 4kVrms.
All cables are to be tested between conductors and conductors to screen for 1min @ 1500Vrms.

2) Minimum cable pairs: RS422 = 2 (Plus overall screen). RS485 = 1 (Plus overall screen).
3) Take care not to stress or damage cables during installation.
4) Total length of trunk line, including spurs, is not to exceed 1200m without isolating boosters.
5) Terminating resistors -1kΩ.
6) Cabling paths should avoid sources of radio frequency interferences such as fluorescent lights, variable speed motor drives, welding equipment, radio transmitters, etc.
7) There should be a minimum of 200mm physical separation between power cables and data cables.
8) Data cables should not be exposed to excessive heat or moisture, and should not be buried directly in the ground without protection.
9) Avoid powering a remote station or controller from the same power supply as a variable speed drive.
10) All unused twisted pairs should be terminated at both ends with 1kΩ resistors. DO NOT ground unused pairs.

**Commissioning.**

1) Check that all the above conditions have been met, and the wiring checked, before applying power to the 2100-IS-USB.
2) Check the relay output functions correctly, and the relay specifications are not being exceeded.