PyroCV Series

Operator's Guide



CALEX
ELECTRONICS LIMITED

INTRODUCTION

The PyroCV is a simple, robust infrared temperature sensor with CAN Communications or a voltage output, tested to EMC standards for construction machinery.

No complicated setup is required - just connect a temperature indicator and power supply, and instantly start taking measurements.

It is suitable for non-contact temperature measurement on most non-reflective non-metal surfaces, such as asphalt, concrete and bulk materials, painted surfaces, thick plastics, rubber and organic materials, among many others.

GENERAL	
Temperature Range	-20°C to 500°C
Accuracy	±1% of reading or ±1°C whichever is greater
Repeatability	± 0.5% of reading or ± 0.5°C whichever is greater
Emissivity	CAN: 0.2 to 1.0 (configurable) Voltage: 0.95 (fixed)
Startup Time	250 ms
Response Time	125 ms (90% response)
Spectral Range	8 to 14 µm
Supply Voltage (at sensor)	10 V DC to 28.8 V DC
Max. Current Draw	20 mA
Minimum Load Resistance (Voltage only)	50 kΩ
Wiring Protection	Reverse polarity; shorts to other pins
MECHANICAL	
Construction	Stainless Steel
Dimensions	Sensor body length 86.5 mm
Thread Mounting	M18 x 1 mm pitch, length 60mm
Weight	90 g

ENVIRONMENTAL

Environmental Rating	IP65 / IP67. (when mated)
Ambient Temperature	-40°C to 85°C. no condensation
Relative Humidity	95% max. non-condensing
Storage Temperature	-40°C to +85°C

CONFORMITY

Electromagnetic Compatibility: ISO 13766-1*

* The PyroCV has been tested for load dump conditions in accordance with ISO 16750-2 (clamped load dump). Compliance with ISO 13766-1 assumes installation in electrical systems providing equivalent load dump suppression. Protection against unclamped load dump must be ensured at system level.

CALIBRATION

All sensors are calibrated at the time of manufacturing. A UKAS-traceable certificate of calibration with three temperature points is available as an option at the time of ordering.

Calex can also check the calibration of existing sensors, and recalibrate as necessary. A UKAS traceable certificate of calibration is also provided with this service.

MODEL NUMBERS

PCV | **151** | **MT** – **CAN**

Example Model Numbers: PCV-151-CAN, PCV-151-ST-V

Output type

- **CAN** Raw CANbus communications
- **V** 0-5 V DC output

Temperature range (Voltage Output Only)

- **LT** -20°C to +100 °C
- **MT** 0°C to 250 °C
- **HT** 0°C to 500 °C
- **ST** Customer's choice of temperature range within the limits -20°C to 500°C; minimum span 100°C

Field of view

- **151** 15:1 divergent optics

Series

- **PCV** (PyroCV) Simple infrared temperature sensor conforming to EMC requirements for construction machinery

DISTANCE AND SPOT SIZE

Mount the sensor at a distance where the measured spot size is smaller than the target. The spot size must not be larger than the target.

We normally recommend that the target is at least twice as large as the measured spot for maximum accuracy.

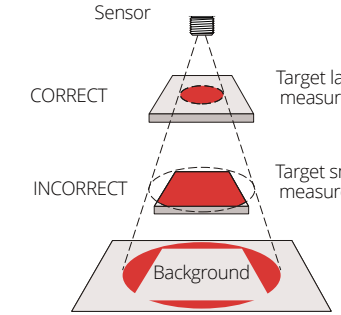

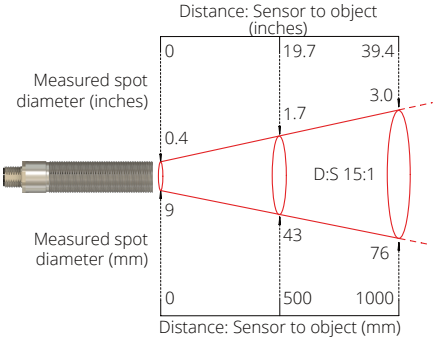

The sensor may be used at longer distances than shown, and will measure a larger spot. The measurement accuracy is not affected by the measurement distance.

There is no maximum measurement distance provided the air between the sensor and target is free of obstructions, steam, smoke, dust etc. The above measured spot sizes contain 90% of the detected infrared energy.

DIMENSIONS

All dimensions in mm

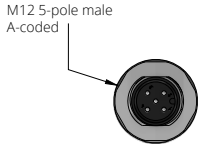

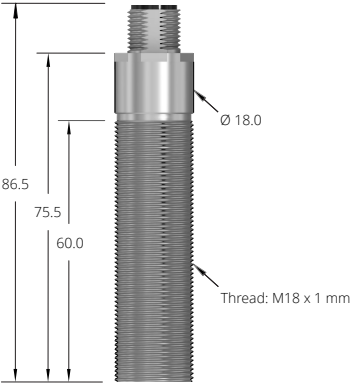



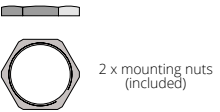

INSTALLATION

The installation process consists of the following stages:

1. Preparation
2. Mechanical installation
3. Electrical installation

Please read the following sections thoroughly before proceeding with the installation.

1. PREPARATION

Ensure that the sensor is positioned so that it is focused on the target only.

AMBIENT TEMPERATURE

The sensor is designed to operate in ambient temperatures from -40°C to 85°C.

Avoid thermal shock. Allow 20 minutes for the unit to adjust to large changes in ambient temperature.

ATMOSPHERIC QUALITY

Smoke, fumes or dust can contaminate the lens and cause errors in measurement.

ELECTRICAL INTERFERENCE

To minimise electromagnetic interference or 'noise', the sensor should be mounteed away from motors, generators and such like.

POWER SUPPLY

Be sure to use a 10 to 28.8 V DC (20 mA max.) power supply.

2. MECHANICAL INSTALLATION

All sensors have a M12 5-pin connector for your own specified cable and 2 mounting nuts as standard. The sensor can be mounted on brackets or cut-outs of your own design.

Note: The sensor must be grounded at only one point, either the cable shield or sensor housing.

3.a. ELECTRICAL INSTALLATION (CAN)

The sensor has an M12 connector on the rear. This can be connected to a cable and has the following pin-out:

CANBus

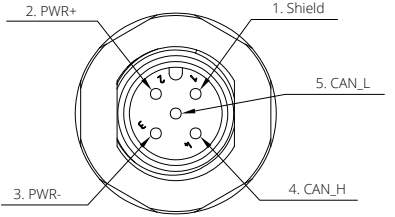

CABLE

M12 Socket

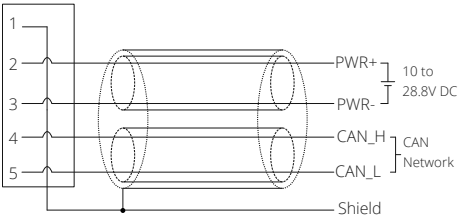

Fieldbus/CAN Open Cable

e.g SICK YF2A15-020C1BXLEAX

4.a. OPERATION

Once the sensor is in position and the appropriate power and cable connections are secure, the system is ready for continuous operation after completing the following steps:

1. Turn on the power supply
2. Turn on the CAN instrumentation
3. Use the following information to read the measured temperature

3.b. ELECTRICAL INSTALLATION (Voltage)

The sensor has an M12 connector on the rear. This can be connected to a cable and has the following pin-out:

Voltage

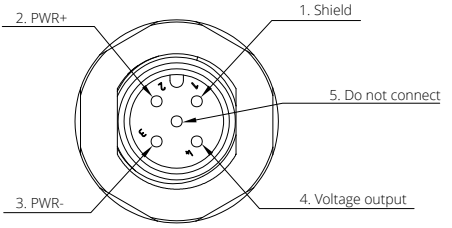

CABLE

M12 Socket

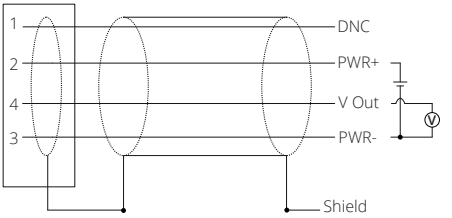

M12 cable with shielded barrel

e.g SICK YF2A24-030UB4XLEAX

4.b. OPERATION

Once the sensor is in position and the appropriate power and cable connections are secure, the system is ready for continuous operation after completing the following steps:

1. Turn on the power supply
2. Turn on the meter, chart reader or controller
3. Read / monitor the temperature

PROTOCOL

- The sensor transmits an 8-byte message every 200 ms containing the internal sensor temperature and object temperature in °C.
- The first 4-bytes are the object temperature encoded as a floating-point.
- The second 4-bytes are the internal sensor temperature encoded as a floating-point.
- This message is sent to the CAN ID stored in non-volatile memory. The ID is persistent between power cycles.
- The CAN ID may be set to a value from 0 to 2047 (0x0 to 0x7FF) as a 4-byte unsigned integer.
- The emissivity setting may be set to a value from 0.2 to 1.0 as a 4-byte floating-point.
- These floating-point values can be decoded simply using an IEEE 754 binary-to-decimal converter.

Bytes	**DLC**
Value	8
Hex	
Encoding	
Decimal	

Object Temperature			
DATA0	**DATA1**	**DATA2**	**DATA3**
0x51	0x39	0xB2	0x41
0x41B23951			
Float			
22.28 °C			

Internal Sensor Temperature			
DATA4	**DATA5**	**DATA6**	**DATA7**
0xA4	0x70	0xDF	0x41
0x41DF70A4			
Float			
27.93 °C			

After write commands are sent, the sensor will send back the same data as an "echo" to confirm it was received:

COMMANDS

Get Emissivity Setting [0x86]

After this command is sent, the sensor will return the emissivity setting as a floating point value as follows:

Value No value is sent. The sensor will return the emissivity setting.

Encoding Float

Hex 0x00000000

Bytes	DLC	DATA 0	DATA 1	DATA 2	DATA 3	DATA 4
Value	5	0x86	0x00	0x00	0x00	0x00
		Comm and ID	Send the command with these bytes empty. The sensor will return the emissivity setting in these bytes as a floating-point value.			

Bytes		DATA5	DATA6	DATA7
Value		-	-	-

Set Emissivity Setting [0x06]

Value (Example) 0.95 (decimal)

Encoding Float

Hex 0x3F733333

Bytes	DLC	DATA 0	DATA 1	DATA 2	DATA 3	DATA 4
Value	5	0x06	0x33	0x33	0x73	0x3F
		Comm and ID	Emissivity Setting			

Bytes		DATA5	DATA6	DATA7
Value		-	-	-

Note: The default emissivity setting is 0.95.

Set CAN ID [0x0D]

Value (Example)	13 (decimal)
Encoding	Unsigned Integer
Hex	0x0000000D

Bytes	DLC	DATA 0	DATA 1	DATA 2	DATA 3	DATA 4
Value	5	0x0D	0x0D	0x00	0x00	0x00
		Command ID	CAN ID			

Bytes		DATA5	DATA6	DATA7
Value		-	-	-

Note 1: Changing the CAN ID is effective immediately and therefore any following commands must be to the new CAN ID.

Note 2: The default CAN ID is 0.

Get Status [0x89]

Value (Example)	0x00000080
Encoding	Unsigned Integer

Bit 0: Measurement Timeout
Bit 1: Measurement Out of Range
Bit 2: Internal Temp, Out of Range
Bit 3: Transmit Error
Bit 7: Power Good

Bytes	DLC	DATA 0	DATA 1	DATA 2	DATA 3	DATA 4
Value	5	0x89	0x80	0x00	0x00	0x00
		Command ID	Read Status			

Bytes		DATA5	DATA6	DATA7
Value		-	-	-

TROUBLESHOOTING

Symptom	Probable Cause	Solution
No output	No power to sensor	Check power supply and wiring
Inaccurate measured temperature	Target too small for sensor's field of view	Ensure the sensor's view is completely filled by the target. Position the sensor closer to the target to measure a smaller area.
	Target is a reflective metal surface	Measure a non-reflective area, or paint or coat a measurable area of the target to make it non-reflective
	Field of view obstruction	Remove obstruction; ensure sensor has a clear view of target
	Dust or condensation on lens	Ensure lens is clean and dry. Clean gently with a soft lens cloth and water. If problem recurs, consider using an air purge collar.
	Incorrect wire connections	Check pinout diagram is consistent with installation wiring
Communication error	Incorrect CAN ID	Check the CAN ID of the sensor and ensure it is set correctly in the Master

GUARANTEE

Calex guarantees each instrument it manufactures to be free from defect in material and workmanship under normal use and service for the period of two years from the date of purchase. This guarantee extends only to the original buyer according to Calex's standard Terms and Conditions of Sale.

Issue B - Apr 2026