PyroCV

Infrared Temperature Sensor for Construction Vehicles



- Conforms to EMC standards for Construction Machinery
- Measures the temperature of asphalt and non-reflective construction materials without contact
- Temperature ranges from -20°C to 500°C
- Durable, robust stainless steel 316 housing, sealed to IP67 / IP65 (when mated)
- Quick and easy installation
- CAN communications or linear 0-5 V DC output
- Fast response with high stability
- Also measures non-reflective non-metals such as concrete and bulk materials, as well as painted surfaces (including painted or coated metals).

The PyroCV is a simple, robust infrared temperature sensor with CAN communications or a voltage output, tested to EMC standards for construction machinery.

No complicated setup is required - just connect a temperature indicator and power supply, and instantly start taking measurements.

It is suitable for non-contact temperature measurement on most non-reflective non-metal surfaces, such as asphalt, concrete, bulk materials, painted surfaces, thick plastics, rubber and organic materials, among many others.

OPTICS

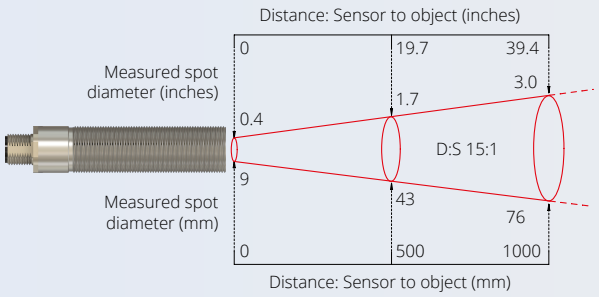

Sensor can measure at longer distances than shown, with a larger measured spot size.

Diagram shows the diameter of the measured target spot versus the distance from the sensing head (90% energy).

Environmental	
Environmental (IP) Rating	IP67 / IP65. (when mated)
Ambient (Operating) Temperature & Humidity	-40°C to +85°C, no condensation
Storage Temperature	-40°C to +85°C

Conformity	
Electromagnetic Compatibility (EMC)*	ISO 13766-1

*The PyroCV has been tested for load dump conditions in accordance with ISO16750-2 (clamped load dump). Compliance with ISO 13766-1 assumes installation in electrical systems providing equivalent load dump suppression. Protection against unclamped load dump must be ensured at system level.

SPECIFICATIONS

General		
Output	Raw CAN, and 0 to 5 V DC, linear with measured temperature	
Temperature Range	LT = -20 to +100 °C MT = 0 to 250 °C HT = 0 to 500 °C Special temperature ranges available as required	
Accuracy	±1% of reading or ±1°C, whichever is greater	
Repeatability	± 0.5% of reading or ± 0.5°C, whichever is greater	
Emissivity Setting	Voltage: Fixed 0.95	CAN: 0.2 to 1.0 (configurable)
Startup Time	250 ms	
Response Time	125 ms (90% response)	
Spectral Range	8 to 14 µm	
Supply Voltage (at Sensor)	10 V DC to 28.8 V DC	
Max. Current Draw	20 mA	
Minimum Load Resistance (Voltage only)	50 kΩ	
Wiring Protection	Reverse polarity; shorts to other pins	

Mechanical	
Construction	Stainless Steel
Dimensions	Sensor body length 86.5 mm
Thread Mounting	M18 x 1 mm pitch, length 60 mm
Weight	90 g

DIMENSIONS (mm)

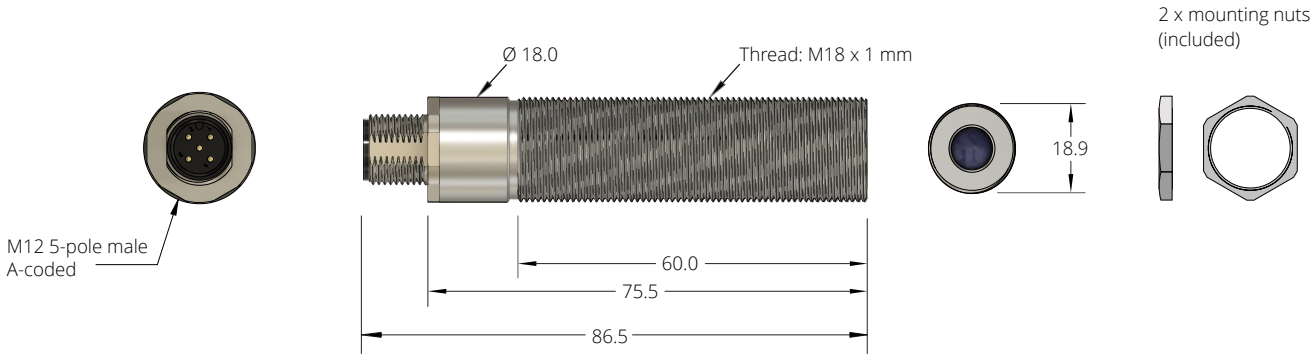

CONNECTIONS

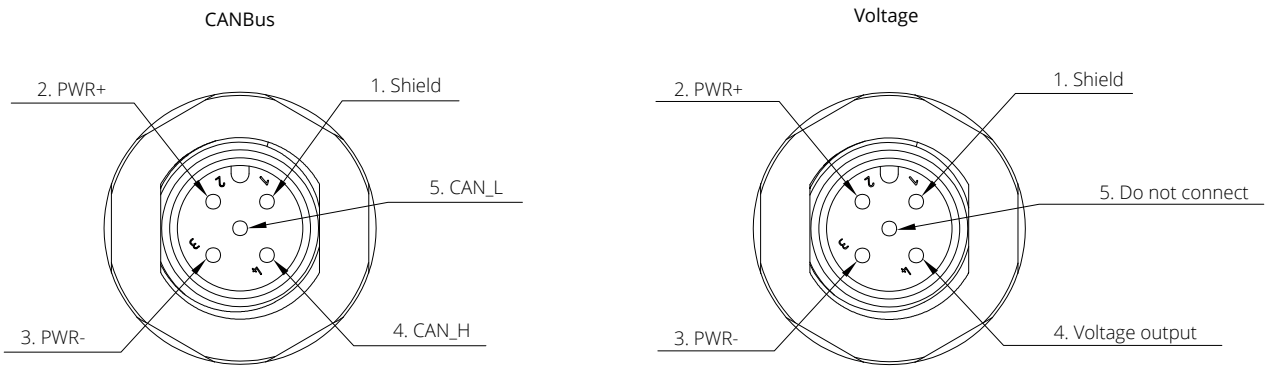

MODEL NUMBERS

PCV | **151** | **MT** | **–** | **CAN**

Example Model Numbers: PCV-151-CAN, PCV-151-ST-V

Output type

CAN	Raw CANbus communications
V	0-5 V DC output

Temperature range (Voltage Output Only)

LT	-20°C to +100 °C
MT	0°C to 250 °C
HT	0°C to 500 °C
ST	Customer's choice of temperature range within the limits -20°C to 500°C; minimum span 100°C

Field of view

151	15:1 divergent optics

Series

PCV	PyroCV	Simple infrared temperature sensor conforming to EMC requirements for construction machinery.

Issue A- Apr 2026

Specifications subject to change without notice