Indoor Ambience Monitoring Sensor

Featuring LoRaWAN®

AM30x (L)



◆ Introduction

AM30x(L) is a compact indoor ambience monitoring sensor for measurement of temperature, humidity, light, CO_2 concentration, TVOC, barometric pressure, PM2.5, PM10 and motion. The data will be shown on the E-ink screen in real-time, which helps to measure the indoor environment and comfort.

Sensor data is transmitted using LoRaWAN® technology. Combining Milesight LoRaWAN® gateway and Milesight Development Platform solution, users can manage all sensor data remotely.

AM30x(L) can be used in offices, stores, classrooms, hospitals, etc.

◆ Features

- Integrated with multiple sensors like humidity, temperature, CO_2, light, barometric pressure, PM2.5, PM10, etc.
- Multiple display modes and clear emoticon to easily understand the comfort levels via screen
- Support batteries or DC power supply
- Equipped with traffic light indicator and buzzer to indicate device status and threshold alarms
- Store locally historical records and support retransmission to prevent data loss

- Compliant with standard LoRaWAN® gateways and network servers
- Quick and easy management with Milesight Development Platform
- Supports Milesight D2D protocol for ultra-low latency and direct control without gateways for AM304L & AM305L Only
- Integrates with Milesight IoT Cloud for AM307 & AM308(L) Only

◆ Specifications

Model	AM304L	AM305L	AM307	AM308(L)
Wireless Transmission				
Technology	LoRaWAN® , Milesight D2D		LoRaWAN®	
Antenna	Internal Antenna			
Frequency	CN470/RU864/IN865/EU868/US915/AU915/KR920/AS923-1&2&3&4			
Tx Power	16dBm(868MHz)/22dBm(915MHz)/19dBm(470MHz)			
Sensitivity	-137dBm @300bps			
Work Mode	OTAA/ABP Class A			
Sensors				
Temperature				
Operating Principle	Digital CMOSens® technology (MEMS)			
Range	-20°C~60°C			
Accuracy[1]	Typ. ±0.3°C (-20°C ~ 0°C), ± 0.2°C (0°C ~ 60°C)			
Resolution	0.1°C			
Humidity				
Operating Principle	Digital CMOSens® technology (MEMS)			
Range	0% ~ 100% RH			
Accuracy[2][3]	Typ. ± 2% RH (25°C)			
Resolution	0.5% RH			
Motion				
Operating Principle	Passive infrared (PIR)			
Detection Range	80 ° Horizontal, 55 ° Vertical, 3m			
Status	Vacant/Trigger			
Light				
Operating Principle	Photodiode			
Range	0-60000 Lux			
Report Mode	Illuminance Value or		Illuminance Level (0-5)	

	Illuminance Level (0-5)	
Accuracy	±30% of reading	/
Resolution	1 Lux	/
Carbon Dioxide (CO_2)		
Operating Principle	/	Nondispersive Infrared (NDIR)
Range		400 ~ 5000 ppm
Accuracy		± (30 ppm + 3 % of reading) (0°C~ 50°C, 0% to 85%RH)
Resolution		1 ppm
Barometric Pressure		
Operating Principle	/	Piezoresistive absolute pressure sensor (MEMS)
Range		260 - 1260 hPa
Accuracy		±0.5 hPa
Resolution		0.1 hPa
TVOC		
Operating Principle	/	MOX (MEMS)
Range[4]		1.00 ~ 5.00 (IAQ Rating)
Accuracy		± 1
Resolution		0.01
PM2.5 & PM10		
Operating Principle	/	Laser Scattering
Range		0 ~ 1000 μg/m^3
Accuracy		0~100(±10μg/m^3), 100~500(±10 %) (-10°C~ 60°C)
Resolution		1 μg/m^3
Other Interfaces		
Display	AM307 & AM308: 4.2-inch Black & White E-Ink Screen AM304L & AM305L & AM308L: Not Support	
Button	1 × Power Button + 1 × Reset Button	
LED	1 × Traffic Light Status Indicator	
Buzzer	/	1 × Buzzer
USB	1 × Type-C Port for Power Supply or Console	1 × Type-C Port for Power Supply, Configuration or Console

Software				
Configuration	1. Mobile App via NFC 2. Downlink		1. Mobile App via NFC 2. PC software via USB Type-C port 3. Downlink	
Advanced Features	Calibration, Threshold Alarm, Data Storage (4320 entries), Data Retrievability, Data Retransmission, Button Lock, D2D Data Transmission, D2D Controller		Calibration, Threshold Alarm, Data Storage (18, 000 entries), Data Retrievability, Data Retransmission, Smart Screen Mode, Button Lock	
Physical Characteristics				
Power Supply	1. 4 × 2700 mAh ER14505 Li-$SOCl_2$ Replaceable Batteries 2. 5V/1A by Type-C Port			
Battery Life[5] (10 min interval, 25°C)	Around 14 Years (SF7, EU868) Around 12.5 Years (SF7, US915) Around 7.5 Years (SF10, EU868) Around 3.9 Years (SF10, US915)	Around 11 Years (SF7, EU868 &US915) Around 6.3 Years (SF10, EU868) Around 3.7 Years (SF10, US915)	Around 3.9 Years (SF7, EU868 &US915) Around 3.1 Years (SF10, EU868) Around 2 Years (SF10, US915)	Around 1.3 Years (SF7, EU868 & US915) Around 1.2 Years (SF10, EU868) Around 1 Year (SF10, US915)
Operating Temperature	-20°C - 60°C (E-Ink Screen: 0°C - 40°C)			
Relative Humidity	10% - 90% (non-condensing)			
Ingress Protection	IP30			
Housing&Color	PC+ABS (V0), White			
Weight (With Batteries)	181.25g	187.55g	182.5g	222.6g
Dimension	100.8 × 114 × 22 mm (3.97 × 4.49 × 0.87 in)			
Installation	Wall Mounting via 3M Tape or Screws			
Approvals				
Regulatory	CE, CE (RED), FCC		CE, CE (RED), FCC, ISED	
Environmental	RoHS			

Note:

1. Accuracy corresponding to the temperature:

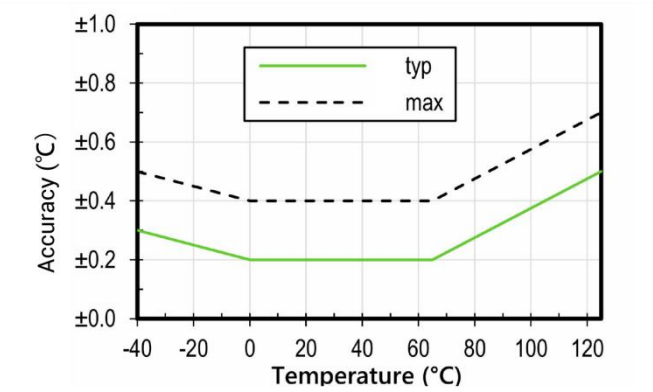

2. Accuracy corresponding to the relative humidity:

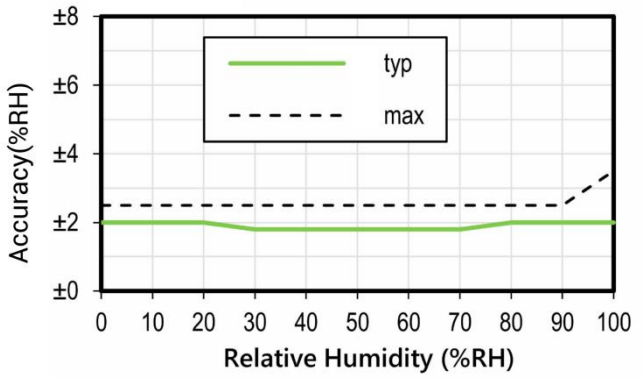

3. Typical RH accuracy corresponding to the temperature at 25°C:

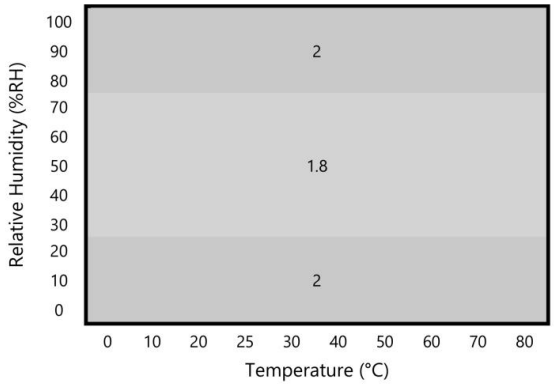

4. Reference to IAQ rating guideline (conversion from mg/m^3 to ppm by the factor is about 0.5):

IAQ Rating	Air Quality
≤1.99	Very Good
2.00 to 2.99	Good
3.00 to 3.99	Medium (not recommended for exposure > 12 months)
4.00 to 4.99	Poor (not recommended for exposure > 1 months)
≥5.00	Bad (not recommended)

5. The battery life is based on test results under laboratory conditions using the standard battery provided by Milesight. Actual performance may vary depending on battery brand and environmental factors.

◆ Ordering Information

Model	Description
AM304L	Temperature, Humidity, Light, Motion
AM305L	Temperature, Humidity, Light, Motion, CO_2
AM307	Temperature, Humidity, Light, Motion, CO_2, TVOC, Pressure
AM308 (L)	Temperature, Humidity, Light, Motion, CO_2, TVOC, Pressure, PM2.5 & PM10

◆ PIR Area

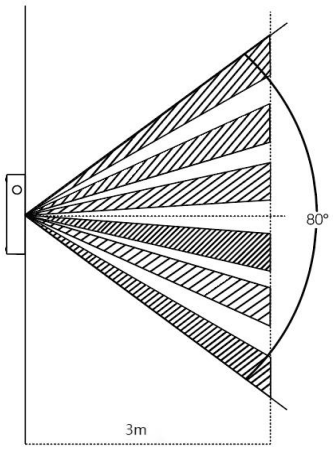

Horizon View

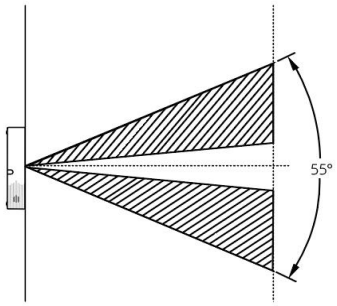

Vertical View

◆ Dimensions (mm)

