OneTemp pty ltd
MEASURE | CONTROL | RECORD
www.onetemp.com.au
1300 768 887

CALEX
ELECTRONICS LIMITED

Busbar Temperature Monitoring in Switchgear Cabinets

with Calex Infrared Temperature Sensors

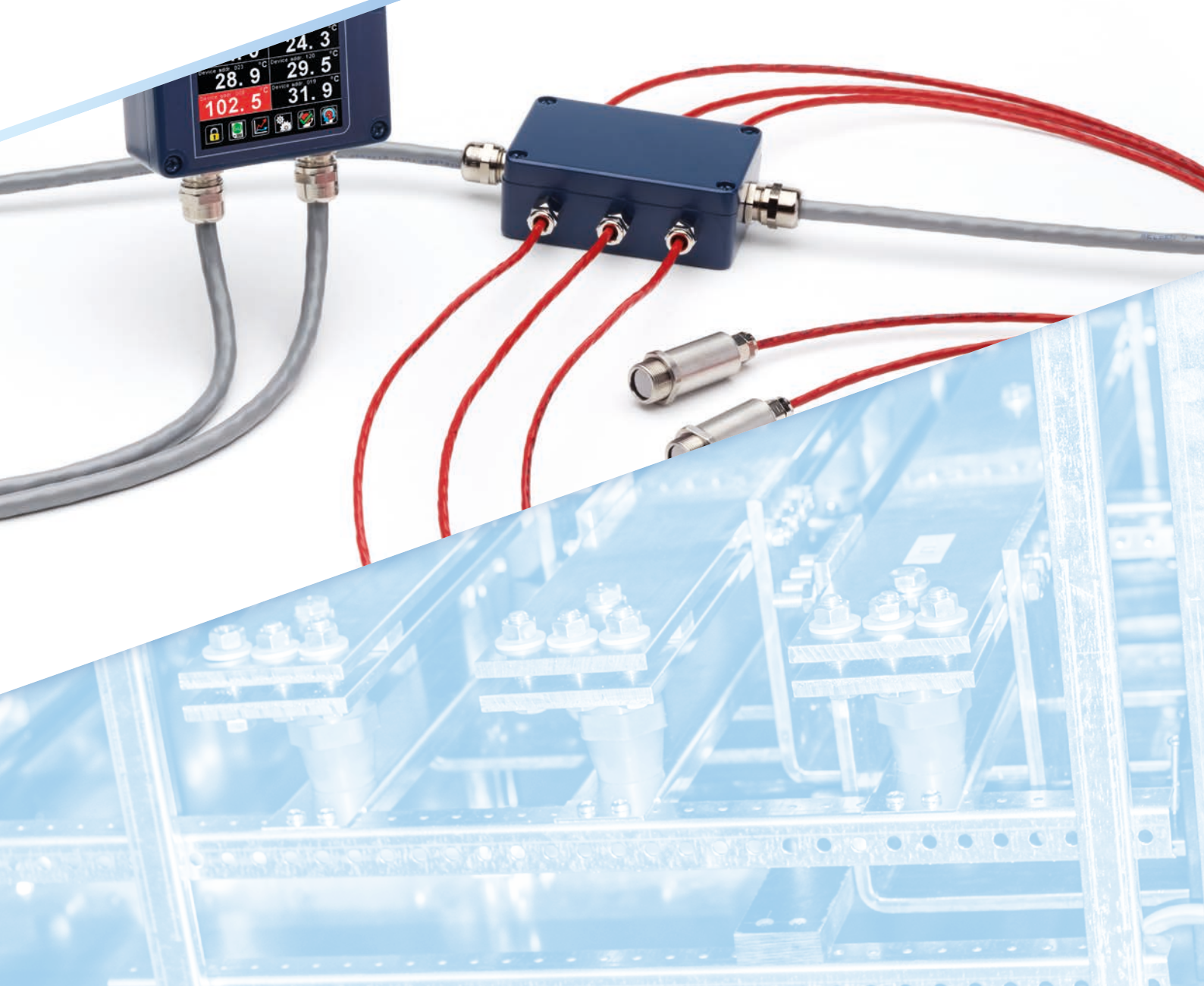

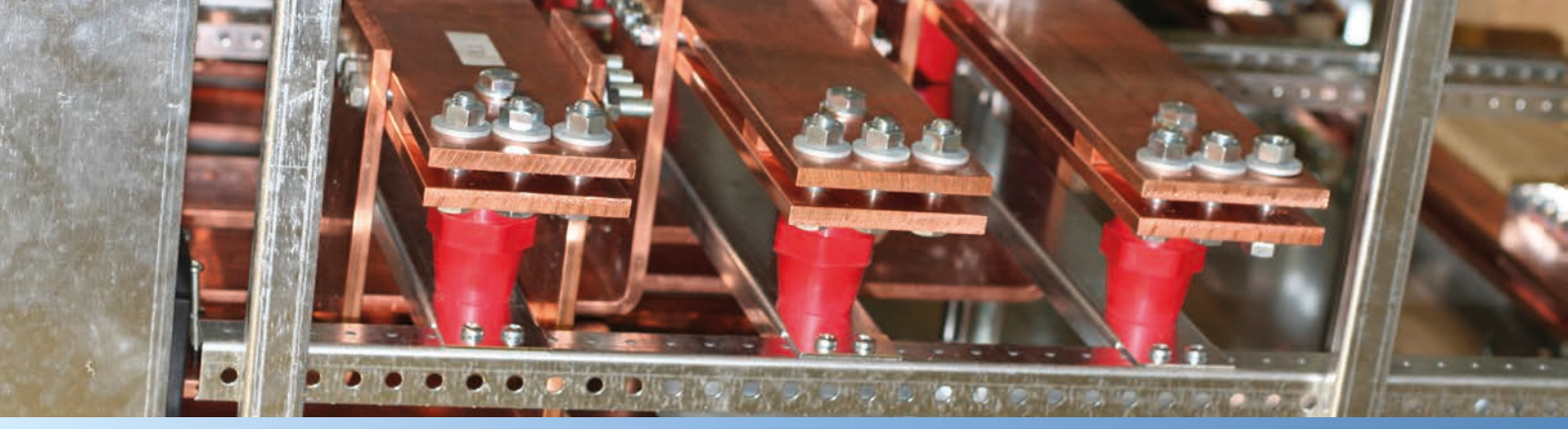

The temperature of electrical connections in power distribution systems is an important indicator of their condition. As connections degrade and fail, their resistance increases and their temperature can rise, causing further damage and a potential fire or explosion risk.

Calex non-contact infrared temperature sensors, in conjunction with a centralised monitoring system are an ideal way of measuring and monitoring these temperatures.

Most large industrial sites have a room containing the electrical switchgear, transformers and panels that distribute electricity around the site. Faults in this equipment can develop gradually over a long period of time, or very quickly in case of the sudden failure of a component. To prevent costly downtime, help plan preventative maintenance and improve safety, it is crucial that temperatures are continuously monitored.

Non-contact infrared temperature sensors are ideal: they can provide an accurate, instant reading of the surface temperature of the conductor, while remaining physically isolated from the voltage it carries.

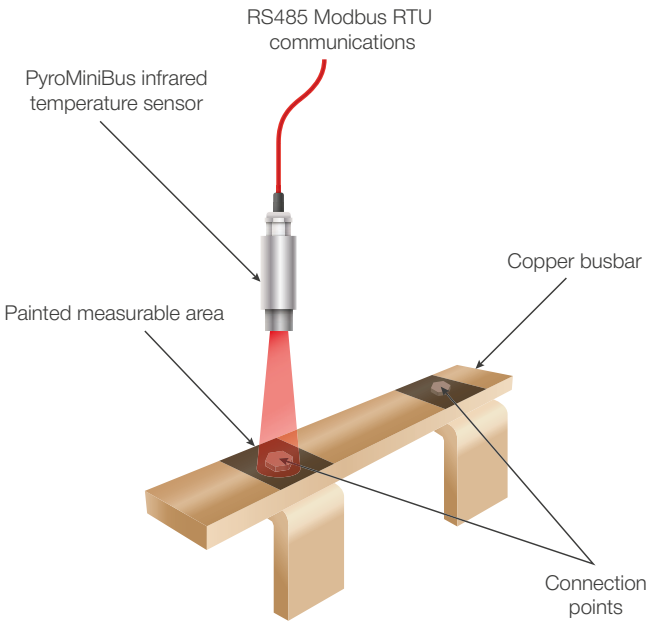

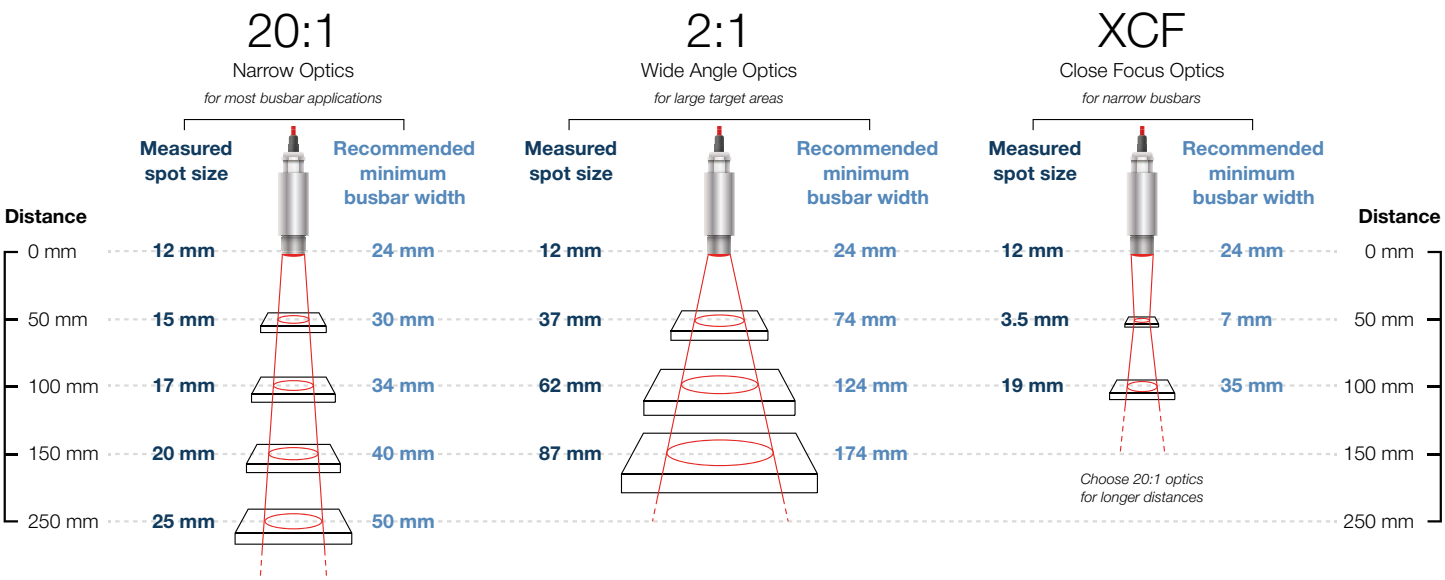

Measuring the Temperature

Inside the switchgear cabinets, power is transferred by copper busbars that are bolted together at connections. This is the area most susceptible to failure.

The first symptom of deterioriation is an increase in joint temperature, which can be detected quickly and reliably by continuously monitoring the temperature of each joint using low-cost IR temperature sensors mounted permanently inside the switchgear cubicles. Part of the surface of the connection should be painted for a high emissivity, which makes it extremely easy to achieve an accurate measurement of the surface temperature.

The sensor is positioned at a safe distance from the busbar to avoid the risk of an electric arc, and will measure the surface temperature within a small spot. The size of the measured spot depends on the chosen optics and the measurement distance. At short distances, the wide-angle 2:1 optics may be best suited; for higher voltages, narrower 20:1 optics allow a much longer measurement distance to be used for a given busbar width. Focused optics are available for measuring narrow busbars.

Switchgear Monitoring

The PyroMiniBus system provides an ideal integrated monitoring, alarm and data logging package for a three-phase switchgear cubicle. 6 sensors are typically used in each cabinet, with 3 on the input busbars and 3 on the output. All are networked to the 6-channel PM180 touch screen hub, which provides temperature display, sensor configuration, data logging to MicroSD Card and alarm outputs via a connected module, and may in turn be networked to further PM180 units in other switchgear cabinets.

Panel PCs are available for connection to multiple PM180 sub-networks. One panel PC can monitor all the sensors in a switchgear room, and the data may be accessed in real time via Ethernet using the software's Modbus TCP functionality. This way, the entire power distribution room can be monitored centrally via a main SCADA system.

The PyroMiniBus is ideal for switchgear applications where the available space for mounting the sensor is limited. It can be installed where the ambient temperature is up to 120°C with no need to supply cooling fluid, and can measure object temperatures from -20°C up to 1000°C.

Measurement Angle

When measuring painted surfaces, the angle of the sensor relative to the surface does not usually affect the measurement accuracy. This is because non-reflective surfaces emit infrared radiation evenly at a wide range of angles.

Please note: when measuring at a 90-degree angle, the measured spot is circular, and at lower angles it is elliptical.

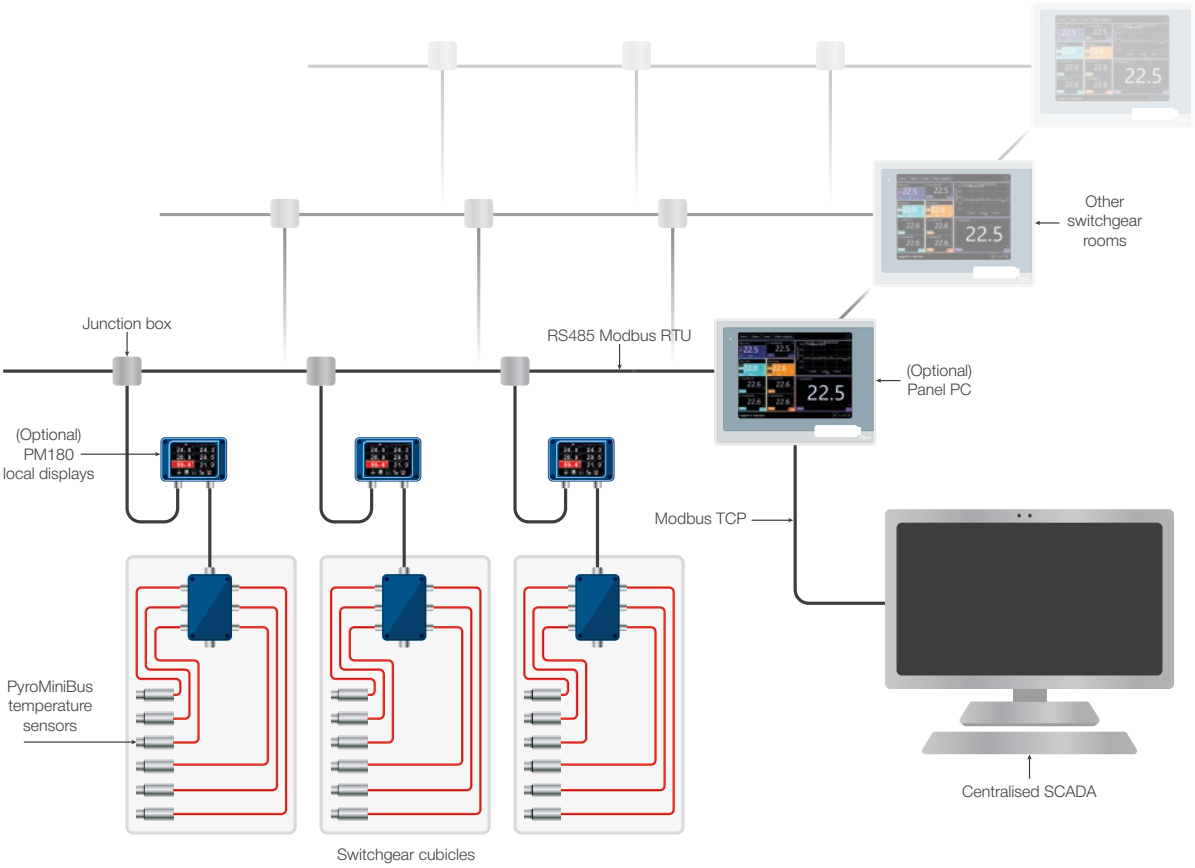

System Components

Sensors

PyroMiniBus sensors have RS485 Modbus RTU communications, and can be connected directly to a Modbus Master, or optional local displays. The sensor body is made of 316 stainless steel to maximise shielding from electromagnetic interference.

Local displays

Optional PM180 6-channel touch screen terminals positioned close to the sensors can help the maintenance engineer locate the high temperature reading.

Local SCADA

Calex panel PCs provide multi-channel monitoring and logging of all the sensors and PM180 display units in each switchgear room. Data may be logged to the local solid state drive and accessed in real time by central SCADA via Modbus TCP.

Centralised SCADA

If no local temperature display is required, the sensors may be connected directly to the central data monitoring system.

Sensors with other output types, and sensors for ambient temperatures up to 180°C, are also available. Contact Calex to see how we can help you choose a system for your application.

OneTemp pty ltd
MEASURE | CONTROL | RECORD
www.onetemp.com.au
1300 768 887

Calex Electronics Ltd
Leedon House I Chartmoor Road I Leighton Buzzard I Bedfordshire I LU7 4TN
Tel: +44 (0)1525 373178 I Fax: +44 (0)1525 851319 I Email: mail@calex.co.uk